Circuit diagram :-

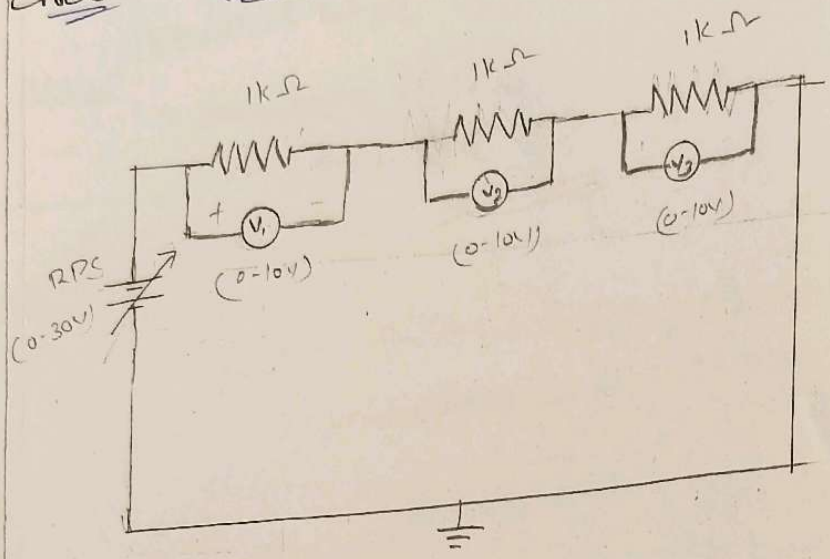

KVL

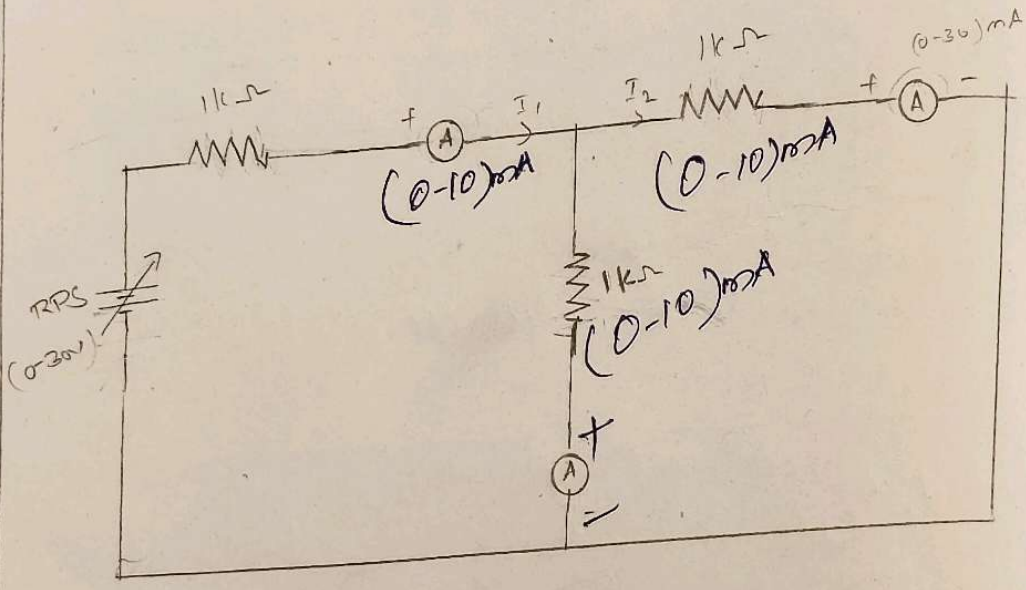

KCL

Ex. No:- 1

VERIFICATION OF KIRCHHOFF'S LAW

Date :- 30/01/26

AIM:-

To verify kirchhoff's voltage law and kirchoff's current law both theorectically and practically for a given DC circuit.

APPARATUS REQUIRED:-

Sl.No	APPARATUS	SPECIFICATION	QUANTITY
1.	Regulated power supply	(0-30)V	1
2.	Voltmeter	(0-30V) MC	3
3.	Ammeter	(0-10mA) MC	3
4.	Resistor	1KΩ	3
5.	Bread board	---	1

THEORY:-

Kirchhoff's current law (KCL) states that in an electric network the algebraic sum of currents meeting at any junction is "zero". Since charge can never accumulate at any point, thus charges following the towards a junction must be equal to the charges following away from junction.

Tabular column :-

V (volts)	V_1 (volts)	V_2 (volts)	V_3 (volts)	$V = V_1 + V_2 + V_3$ (volts)	I (AmP)	I_1 (AmP)	I_2 (AmP)	$I = I_1 + I_2$ (Amp)
2	0.67	0.62	0.67	2	1.3	0.65	0.65	1.3
6	2	2	2	6	4	2	2	4
9	3	3	3	9	6	3	3	6

Calculation :-

KCL :-

$$R = \frac{R_1 R_2}{R_1 + R_2} = \frac{1 \times 1}{1+1} = \frac{1}{2} = 0.5$$

$$R_T = 1 + 0.5 = 1.5 k\Omega$$

$$\begin{array}{r} 1.3 \\ 0.65 \\ \hline 1.95 \end{array}$$

i) $V = IR$

$$(V_1 + V_2 + V_3) I_1 = I_2 + I_3$$

$$I_1 = V/R$$

$$\text{or} = 2/1$$

$$I_1 = 2/1.5$$

$$= 1.33 \text{ mA}$$

$$I_T = \frac{I \times R_2}{R_1 + R_2} = \frac{1.33 \times 1}{1+1} = \frac{1.33}{2} = 0.65 \text{ mA}$$

$$I_2 = \frac{I \times R_1}{R_1 + R_2} = \frac{1.33 \times 1}{1+1} = \frac{1.33}{2} = 0.65 \text{ mA}$$

Kirchhoff's ~~law~~ voltage law (KVL) : states that, in an electric network, the algebraic sum of voltage in a closed path is zero". since potential at a point is a single value. the sum of all potential drops must be equal when traversing a closed path and coming back to same point.

PROCEDURE :

1. Gives connections as per the circuit diagram.
2. Switch ON the supply. vary the RPS (Regulated Power supply) and set a particular input voltage.
3. Note down the readings of ammeters and voltmeters and tabulate them.
4. Vary the RPS for different input voltage and note down the readings of all the meters.
5. Reduce the RPS to it's minimum value and switch off supply.
6. using the tabulated values, verify Kirchoff's laws. practically and verify it theoretically.

S.No	Description	marks alloted	marks obtained
1.	Experiment set up	20	20
2.	observation	20	20
3.	calculation	20	20
4	viva	20	18
5.	Record	20	15
6.	Total	100	93

Result :-

Thus, kirchoff's current law and kirchoff's voltage law are verified practically and theoretically.